REV	DESCRIPTION	DATE	APPD
0	RELEASED	8/20/90	[illegible]

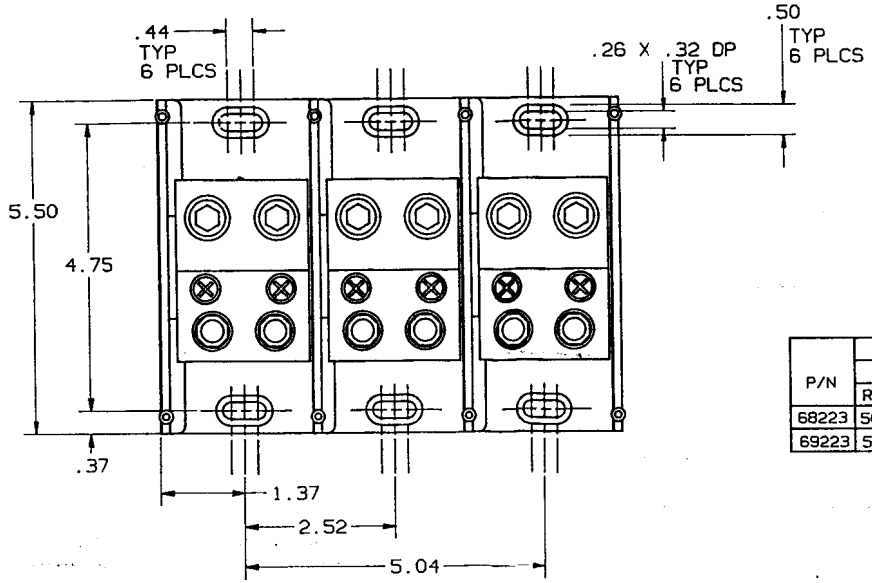

TABLE I

P/N	WIRE RANGE & TORQUE (IN-LBS)				U/L		CSA
	PRIMARY		SECONDARY				
	RANGE	TORQUE	RANGE	TORQUE	FILE NO.	GUIDE NO.	REPORT NO.
68223	500-#4	500-#4 375	3/8-1	3/8-1 228	E73571	XCFR2	LR69363
69223	500-#4	500-#4 500	3/8-1	3/8-1 228	E73571	XCFR2	LR15469

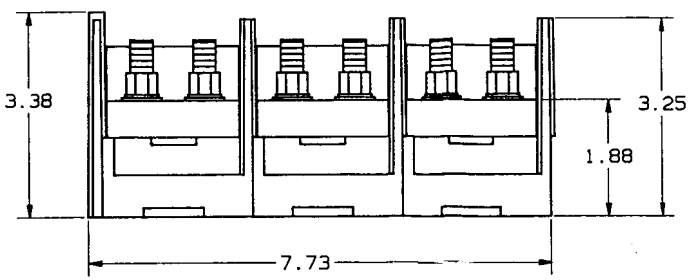

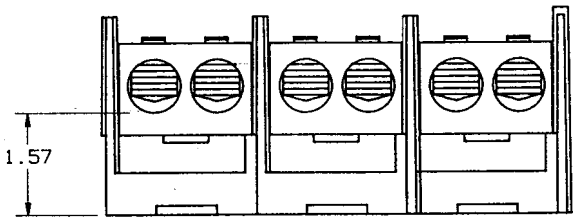

REFERENCE

MAR 1 6 1992

P/N 68223 (CU ONLY)
P/N 69223 (CU-AL)

1. MATL COMPOSITION AND RATING: BASE-POLYCARBONATE-125°C RTI
CONNECTOR-ALUMINUM OR COPPER ALLOY-TIN PLATED.

NOTES: UNLESS OTHERWISE SPECIFIED

NOTES UNLESS OTHERWISE SPECIFIED
- ALL DIMENSIONS ARE IN INCHES
- STAMP OR ETCH DWG. NO. ON PART
- REMOVE ALL BURRS AND SHARP EDGES
- TOLERANCES: XXXX±.0005; XXX±.005; XX±.01; X±.04; ANGLES ±0°30'

THIS DRAWING AND ALL INFORMATION THEREON IS THE PROPERTY OF GOULD, IS CONFIDENTIAL, MUST NOT BE COPIED OR MADE PUBLIC UNLESS AUTHORIZED AND IS SUBJECT TO RETURN ON DEMAND.

ASSY DWG USED ON		REV OR SIM DWG	

MATERIAL

FINISH

SIGNATURES		DATE
DRWN	G. Williams	8/20/90
CHKD	G. Caccia	8/20/90
ENGD		
APPD	M. Pagone	8/20/90

GOULD SHAWMUT
GOULD SHAWMUT
P. O. BOX 729
MARBLE FALLS, TX 78654

PRODUCT INFO

TITLE
PDB, (2)500MCM-#4
X (2) 3/8-1 STUD
3 POLE 600V

DWG NO 05C0290 REV 00

SCALE 3/4 FILE NO SHEET 1 OF 1